optomet.
LASER VIBROMETRY

SMART SCAN+

The SMART Scan+ is a full-field and non-contact vibration visualization system offering optimum signal processing, enhanced accuracy, and user-friendly interface for effective data analysis.

- SMART Scanning Laser Doppler Vibrometer for full-field vibration measurements
- Intuitive, integrated and seamless software
- Non-contact reference measurements with additional fiber head
- Compact design with 7-inch touch display
- Synchronization with other SMART devices
- Built-in data acquisition and signal generation
- Upgradable to SMART 3D Scan or SMART Full-Body system

General specifications

Overview

Measured quantities	Velocity, displacement, acceleration
Max. frequency bandwidth	DC to 50 MHz
Frequency range	Freely configurable low-pass filter for velocity, displacement and acceleration signals
Max. velocity	50 m/s
Measurement ranges	Freely adjustable measurement range limits between • 1 mm/s and 50 m/s for velocity • 10 nm and 5 m for displacement • 10 m/s² and 100 Mio. m/s² for acceleration
Signal processing	Digital (FPGA based)
Filter	Low-pass filters defined by selected frequency range Freely configurable high-pass filter for displacement Tracking filter: off / slow / fast
User interface	7” Full HD+ touchscreen with 1000 nits peak brightness
Operating temperature	-10 °C to 40 °C
Dimensions	Length × width × height (excluding handle): 365 × 194 × 196 mm
Weight	~ 8.9 kg
Power supply	100 - 240 V AC (50-60 Hz) or 12 V DC
Portability	Convenient all-in-one design for seamless portability and simple setup
Storage temperature	-10 °C to 65 °C
Relative humidity	Max. 80 %, non-condensing
Calibration interval	Every 24 months (recommended)

The exact features depend on the configured options.

Measurement specifications

Scan angle	50° x 40°, resolution below 0.00076°, stability better than 0.001°/h
Max. scan points per second	30
Camera	• 4 K 2160p, 40 x hybrid zoom (1080p equivalent), 20 x optical zoom • Horizontal viewing angle: 63.7° (wide end) to 3.2°, driverless installation
Geometry unit	Measure distances to objects and their geometry
Sample size	Min. < 1 mm², max. > 10 m²

Connectivity & Options

Schematic

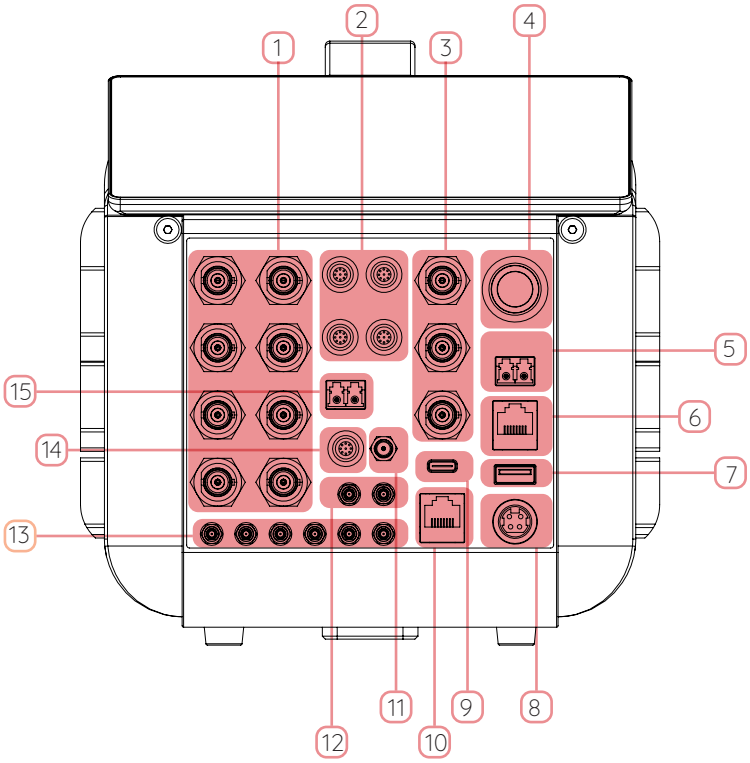

1	Analog signal outputs (BNC)	9	USB port (Type-C)
2	LEMO signal inputs (12 channels)	10	Ethernet port: for device communication/data
3	BNC HF signal inputs (up to 50 MHz)	11	GNSS antenna conncetor
4	Power button	12	10 MHz SMB ports
5	Optical communication port	13	Multi-purpose SMB ports
6	Ethernet port: for device communication/data	14	Power output
7	USB port (Type-A)	15	Optical fiber connector (LC-Duplex)
8	Power input		

Analog inputs and outputs

	Connector type	Characteristics	Description
Analog signal inputs	Up to 4 x LEMO Up to 4 x 3 = 12 channels	± 1 V / ± 10 V (switchable) 24-bit A/D converter per channel 1.5 MSPS sample rate	• Synchronous reference signal recording up to 750 kHz on 12 channels • Support for IEPE (Integrated Electronic Piezoelectric), TEDS and DC/AC coupling • Input impedance: 1 MOhm ‖ 20 pF (optional 1 GOhm ‖ 3 pF)

	Connector type	Characteristics	Description
Analog HF signal inputs	Up to 3 x BNC	± 2 V 14-bit A/D converter 312.5 MSPS sample rate	• Synchronous HF signal recording up to 50 MHz on 3 channels • Input impedance: 50 Ohm
Analog signal outputs	Up to 8 x BNC Up to 8 independent channels	± 2 V 16-bit D/A converter 312.5 MSPS sample rate	• Versatile signal outputs: Analog velocity, displacement, acceleration and arbitrary signal generator • Generate various preset functions (sine, chirp, gaussian, ...) or load arbitrary signals • Source impedance: 50 Ohm
Trigger inputs	2 x SMB		• Digital external trigger input for the device • Input impedance: 50 Ohm
Trigger outputs	2 x SMB		• Digital trigger output for external devices • Source impedance: 50 Ohm

Digital interface

	Connector type	Characteristics	Description
Ethernet (copper)	Up to 2 x RJ45	1 Gbit/s data rate	• Stream the measurement data over Ethernet with up to 312.5 MSPS and 48-bit • Digital remote control of device settings • Interface with digital data acquisition and analysis software SMART Lab • Use your device as control hub for your Ethernet-based equipment
Ethernet (fiber optical)	Up to 2 x LC-Duplex	10 Gbit/s / 1 Gbit/s data rate (switchable)	• Stream the measurement data over Ethernet with up to 312.5 MSPS and 48-bit • Digital remote control of device settings • Interface with data acquisition and analysis software SMART Lab • PTP-based synchronization with other SMART series devices • Up to 20 km range (up to 160 km on request)

Connectivity options

	Connection type	Description
Reference vibrometer	1 x LC-Duplex	• Contactless and synchronous vibration data recording, enabled by second interferometer and additional fiber head • Choice of robust and compact fiber head placed independent of vibrometer
Synchronization	4 x SMB	• 2 x synchronization inputs (Input impedance: 50 Ohm, 3.3 V or 5 V) • 2 x synchronization outputs (Source impedance: 50 Ohm, 3.3 V) • Frequency synchronization with external devices using 10 MHz signals • Frequency/phase synchronization with external devices via PPS (Pulse per second)
USB	1 x USB-C (USB 3.2) 1 x USB-A (USB 3.0)	• Connect USB devices such as cameras, keyboards or storage devices to the vibrometer for direct data recording
Wireless	Bluetooth 5.2 Wi-Fi 7	• Bluetooth: connect human interface devices such as keyboard, mouse or headphones to the vibrometer • Wi-Fi: control your vibrometer and stream measurement data wirelessly
GNSS-module	GPS, Galileo, GLONASS and BeiDou	• Precise absolute time and position information using global navigation satellite systems (GNSS) • External antenna connector
Inertial measurement unit (IMU)		• Synchronous recording of the vibrometer's acceleration and orientation • Vibration monitoring of vibrometer enables detection of disturbances • More accurate alignment with your test object

Frequency options

Frequency 250 kHz	Measure frequencies up to 250 kHz, covering the entire acoustic range and beyond	S
Frequency 5 MHz	Measure frequencies up to 5 MHz	O
Frequency 15 MHz	Measure frequencies up to 15 MHz	O
Frequency 25 MHz	Measure frequencies up to 25 MHz	O
Frequency 35 MHz	Measure frequencies up to 35 MHz	O
Frequency 50 MHz	Measure frequencies up to 50 MHz to the limit of what is technologically feasible	O
Frequency upgrade M	Upgrade the frequency limitation of any option by 500 kHz	O
Frequency upgrade L	Upgrade the frequency limitation of any option by 1 MHz	O
Frequency upgrade XL	Upgrade the frequency limitation of any option by 5 MHz	O

Velocity options

Basis	Continuously adjust the velocity measurement range between 10 mm/s and 15 m/s	S
High Speed	Measure velocities up to 25 m/s	O
Pro	Measure velocities up to 35 m/s	O
Master	Measure velocities up to 50 m/s	O
Ultra	Measure velocities up to 50 m/s and get access to the high resolution upgrade with the smallest velocity measurement range of 1 mm/s	O
High-resolution upgrade	Smallest velocity measurement range 1 mm/s	O
Velocity upgrade M	Increase the maximum velocity of any velocity option by 2.5 m/s	O

Measurement quantities

Velocity	Measure vibrational velocities	S
Displacement	Measure vibrational displacements with continuously adjustable ranges from 10 nm to 5 m	O
Acceleration	Measure vibrational accelerations with continuously adjustable ranges from 10 m/s^2 to 100 Mio. m/s^2	O

Warranty

Warranty	12 months	S
Warranty extension	Extension of standard warranty by 12 months	O

Maintenance

Extended maintenance	Additional extension of hardware maintenance by 12+ months	O
Recalibration & cleaning	Check, cleaning & realignment of optical parts, check of laser output power, and factory calibration	O

Accessories

Transport case	• Stable and waterproof Peli case for safe storage and transport of vibrometer • External dimensions (L x W x H): 62.5 x 49 x 35 cm	S	
Protection window	Protects the scanning unit against dust, wind and acoustic excitation at high sound pressure levels	S	
Close-up unit	For measurements of small objects with stand-off distances in the range of millimeters	O	
Coaxial unit	Aligns the optical axes of measurement laser and camera	O	
Transport bag	Compact and light transport bag for outdoor measurements	O	
Tripod with fluid head	Precisely align your vibrometer with high-quality tripods by Manfrotto	O	
Ring light	For illumination of small test objects. Requires Close-up Unit.	O	
Mirror set	Enables contactless vibration measurements even where access is diffi-cult. The mirror set contains 4 front surface mirrors.	O	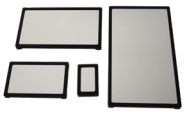
IR-detector card	Transforming the invisible infrared light into a spot of visible light	S	

Optical specifications

Overview

Working distances	• Variable working distance from 250 mm to 100 m • With Coaxial Unit: 111 mm to 1 m • With Close-Up Unit: below 6.5 mm to 54 mm
Laser wavelength	Measurement laser: 1550 nm, Target laser: 510-530 nm
Laser safety class	• Measurement laser: output power: <10 mW, class 1 • Target laser: output power: <1 mW, class 2
Lens	Long-Range, 100 mm focal length
Optics	Auto-, and manual focusing

Spot size and depth of focus

Stand-off distance	Spot diameter (typical)	Depth of focus (typical)
mm	µm	± mm
250	38,3	2
500	52,4	4
1000	83,0	10
1500	111,9	18
2000	142,5	30
2500	172,5	44
5000	312,0	142
Every additional meter	+ 94	

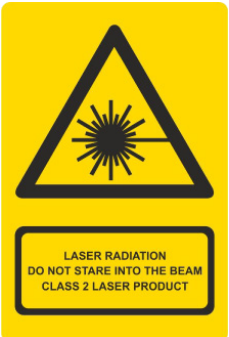

DO NOT STARE INTO BEAM Class 2 Laser Product
Laser CLASS 1: invisible, λ = 1550 nm, output power: < 10 mW
Laser CLASS 2: visible, green laser, λ = 510-530 nm, output power: < 1 mW

Spot size and depth of focus with optional close-up unit

Stand-off distance	Spot diameter (typical)	Depth of focus (typical)
mm	µm	± mm
54	7,7	0.1
50	8,2	0.1
45	8,2	0.1
40	8,8	0.1
35	9,4	0.1
30	10,6	0.2
25	11,8	0.2
20	13,0	0.2
15	13,5	0.3
10.6	14,7	0.3
6.5	15,3	0.3

Software SMART Lab

SMART Lab - Setup module

- Define general measurement settings for vibrometer and reference channels
- Load 3D CAD models in STL (point cloud) or NASTRAN file format
  - Selection of CAD model parts
- Choose measurement area and measurement points using different options
  - CAD model-based area selection and automatic generation of measurement points
  - Creation of equidistant measuring grids even on curved surfaces
  - Shape-based area selection using different shapes (rectangles, circles and polygons) and measurement grid options (rectangular, radial, triangular)
- Measurement point editing including
  - Changing the point density (refining or coarsening the grid)
  - Manual manipulation of the measuring points (move, delete and add)
- Movement, rotation and zoom of the view via keyboard shortcuts and mouse
- Calculation of the approximate total measuring time

SMART Lab - Preparation module

- Remote control of vibrometer settings via a single ethernet connection including
  - Spatial position, autofocus, and brightness of measurement and target laser
  - Zoom, focus and color options of 4K video camera
- Display of all vibrometers and their live 4K video feed in one software
  - Calibration of laser movement with camera image
  - Positioning the measuring grid on the real measurement object
  - Automatic or manual spatial calibration of the vibrometer to the measurement object
  - Calibration quality check at any time, including mathematical error computations

SMART Lab - Acquisition module

- Fully automatic, phase correct acquisition of vibrometer signal and reference sensor data (e.g. from microphones or acceleration sensors)
- Convenient access to all your data in a single software - from vibrometers to multiple reference channels
- Simultaneous recording of velocity, displacement and acceleration (displacement is not an integration of the velocity signal)
- Triggering on measured signals or external triggers
- Seamless switching between time and frequency-domain representation
- Frequency-domain representation with up to 536 Mio FFT lines
- Several window functions, e.g., rectangular, hanning, hamming, exponential
- Multi-channel arbitrary signal generator to generate predefined signals (sine, sine sweep, rectangle, random, etc.) or custom signals from imported .csv or .wav files
- Real-time signal analysis and improvement based on speckle tracking and smart averaging
- Measurement dashboard: Convenient access to all information regarding the running measurement
  - Measurement progress and status (e.g. measurement point, live signal level)
  - Measurement data quality (total/individual points)
- Visualization of measurement data

SMART Lab - Post-processing module

- Calculation of various frequency functions: FRF, FFT, Auto-Spectrum, Cross-Spectrum, Coherence
- Presentation of frequency-domain results in magnitude and phase
- 3D-animation of mode shapes at user-defined frequencies based on FRF and FFT data
- Vibration animation of the entire assembly or of individual components
- 2D heatmaps of FRF magnitude and phase, FFT magnitude, time data RMS, and coherence
- Changeable reference channels and different reference points for different areas
- Manipulation of measurement area and points

- Entirely customizable view options including color maps, viewing angles, texture surfaces, etc.
- Comparison of measurement data from multiple sources in time and frequency domain
  - Measurement cursors
  - Display of several measured variables (FFT, FRF, time data, etc.) for vibrometer channels, reference channels, averaged measurement data
- Take screenshots of graphs and animations from within our software

SMART Lab - Data import and export

- Multithreaded data export to Universal File Format (.uff), to Hierarchical Data Format (.hdf5) and to MATLAB® file format (.mat)
  - Vibrometer and reference channel data
  - Time and frequency data including FFT, FRF and coherence
  - Coordinates and measurement grid
  - Export time data as .wav audio file
- Export animations of time data (wave-propagation) and frequency data (mode-shapes) as high resolution (up to 4K) video

SMART Lab - Software options

Time domain analysis and animation to visualize the propagation of vibrations	S
Modal analysis to gain insight in the dynamical properties of the device under test	O
1 year of included software updates	S
Software update period extension	O

SMART Lab runs on any modern computer with Microsoft Windows.

Mechanical parameters

Overview

Dimensions	Length × width × height (excluding handle): 365 × 194 × 196 mm
Weight	~ 8.9 kg
Operating Temperature	-10 °C to 40 °C
Storage Temperature	-10 °C to 65 °C
Relative Humidity	max. 80 %, non-condensing

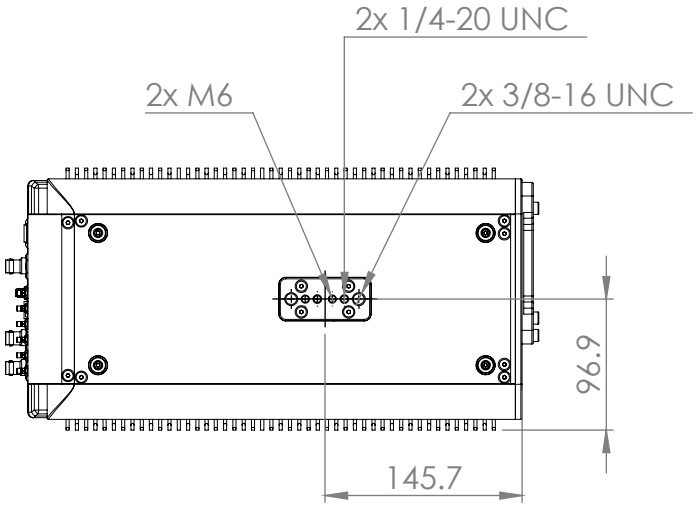

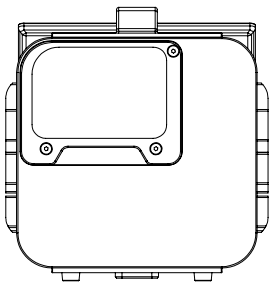

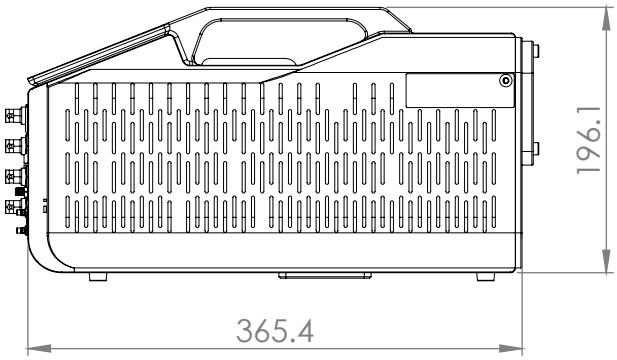

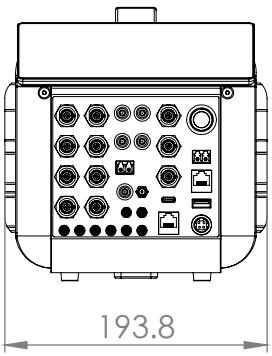

Optomet GmbH
Uhlandstraße 9
64297 Darmstadt
Germany

Tel.: +49 6151 38432-0
Fax: +49 6151 3688460

sales@optomet.com
https://www.optomet.com

optomet.
LASER VIBROMETRY